CROSSING SIGNAL LAMPS OPERATING WITH ADDITIONAL CIRCUIT FEATURES

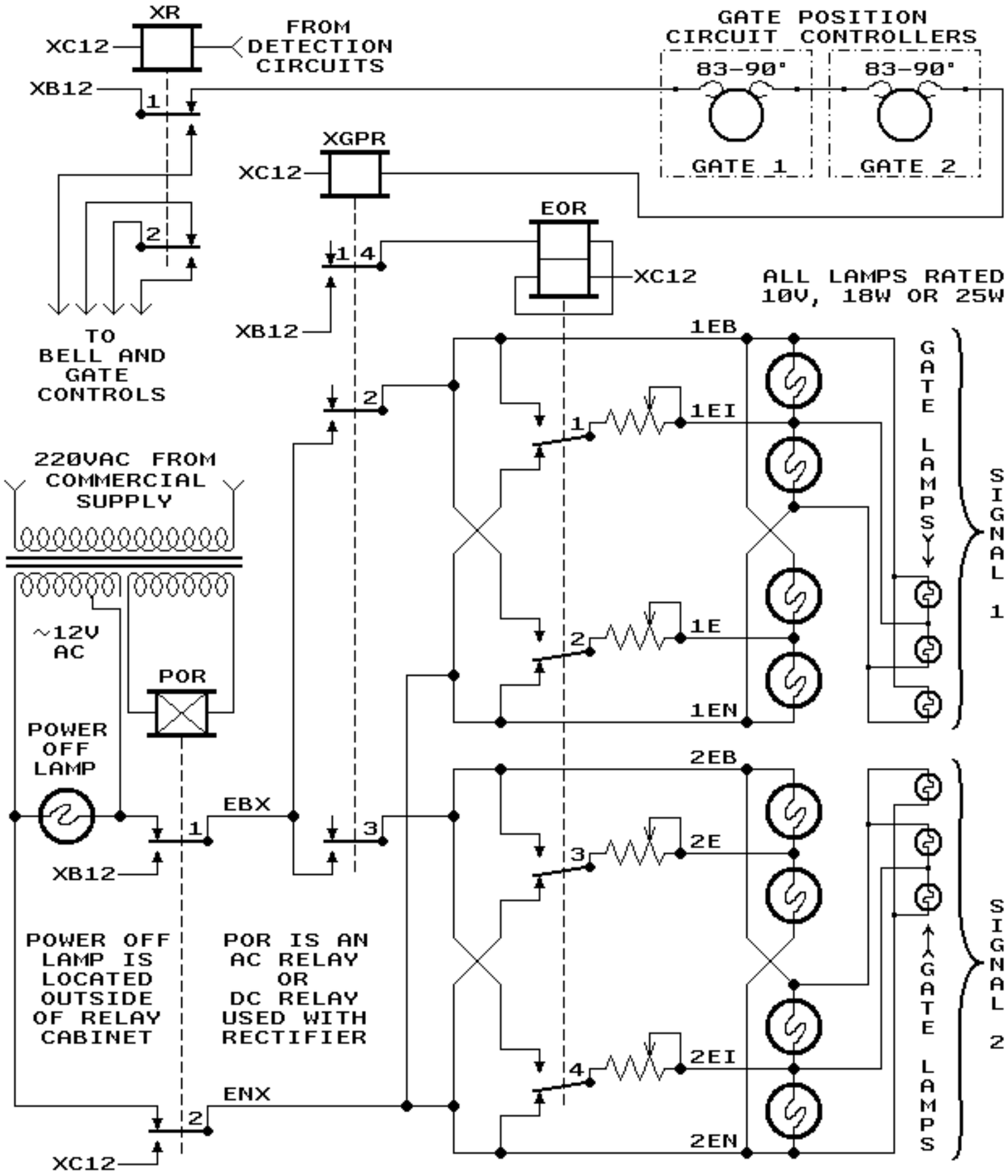

XB12 AND XC12 RESPECTIVELY REPRESENT THE SUPPLY AND RETURN SIDES OF THE 12-VOLT CROSSSING BATTERY.

M.R.E.
11-8-06